A	PLUG
D1	VCC COMPRESSOR
FC	FREEZER COMPARTMENT
SV	STOPVALVE
H4	FUSE
L	DEFROST HEATER
T3	VCC INVENTER
N1	FAN MOTOR FREEZER
N4	FAN MOTOR SHOCK FREEZE
N5	FAN MOTOR SHOCK FREEZE
T1	ELECTRONIC MODULE
U1	FREEZER EVAPORATOR SENSOR
U2	FREEZER AIR SENSOR
ST	STRIP LED
X	COMPRESSOR EARTHING

00	BLACK
11	BROWN
22	RED
33	ORANGE
44	YELLOW
55	GREEN
66	BLUE
77	VIOLET
88	BLUE-SKY
99	WHITE
AA	GREY

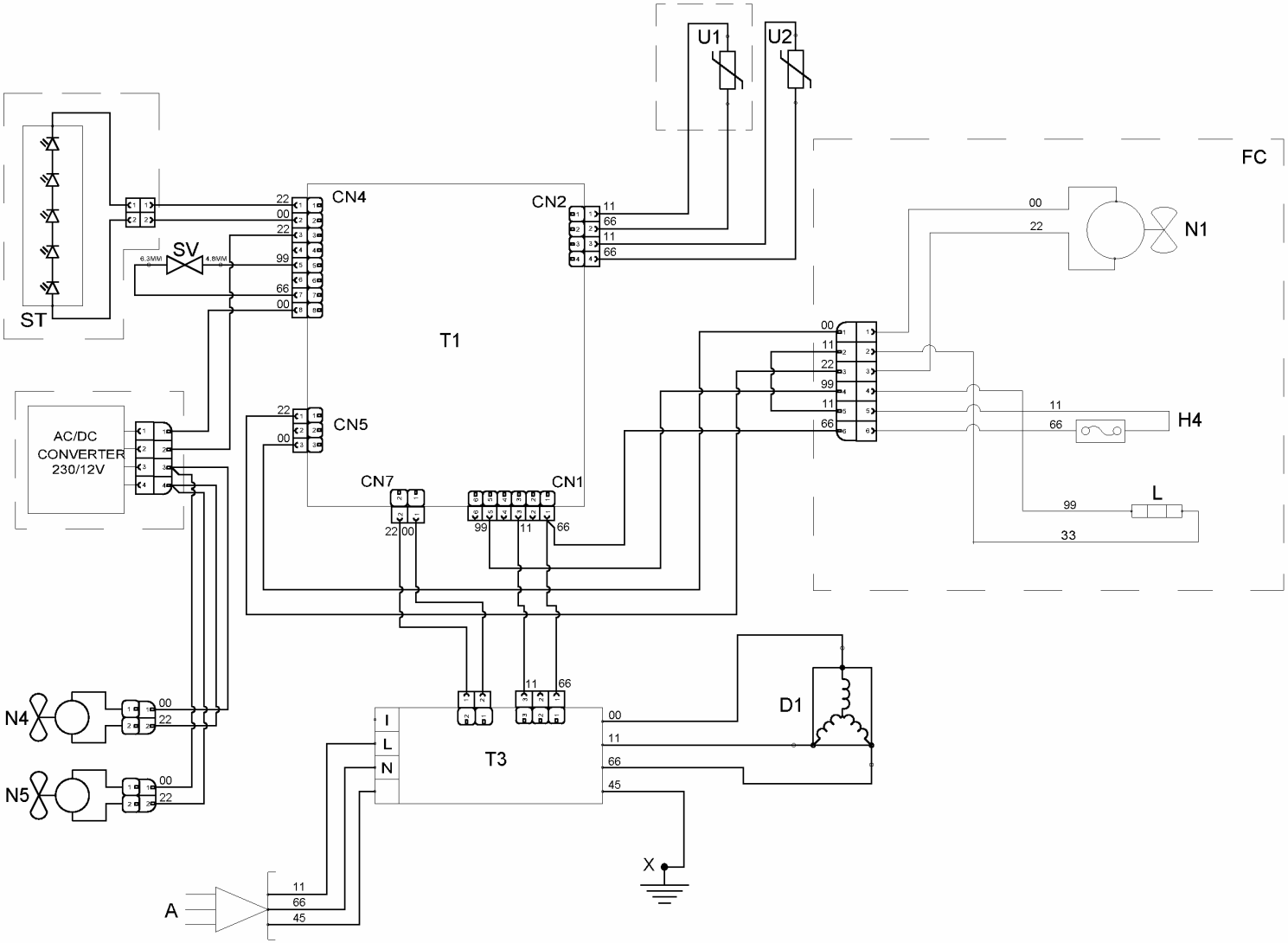

4000 108 52605-1

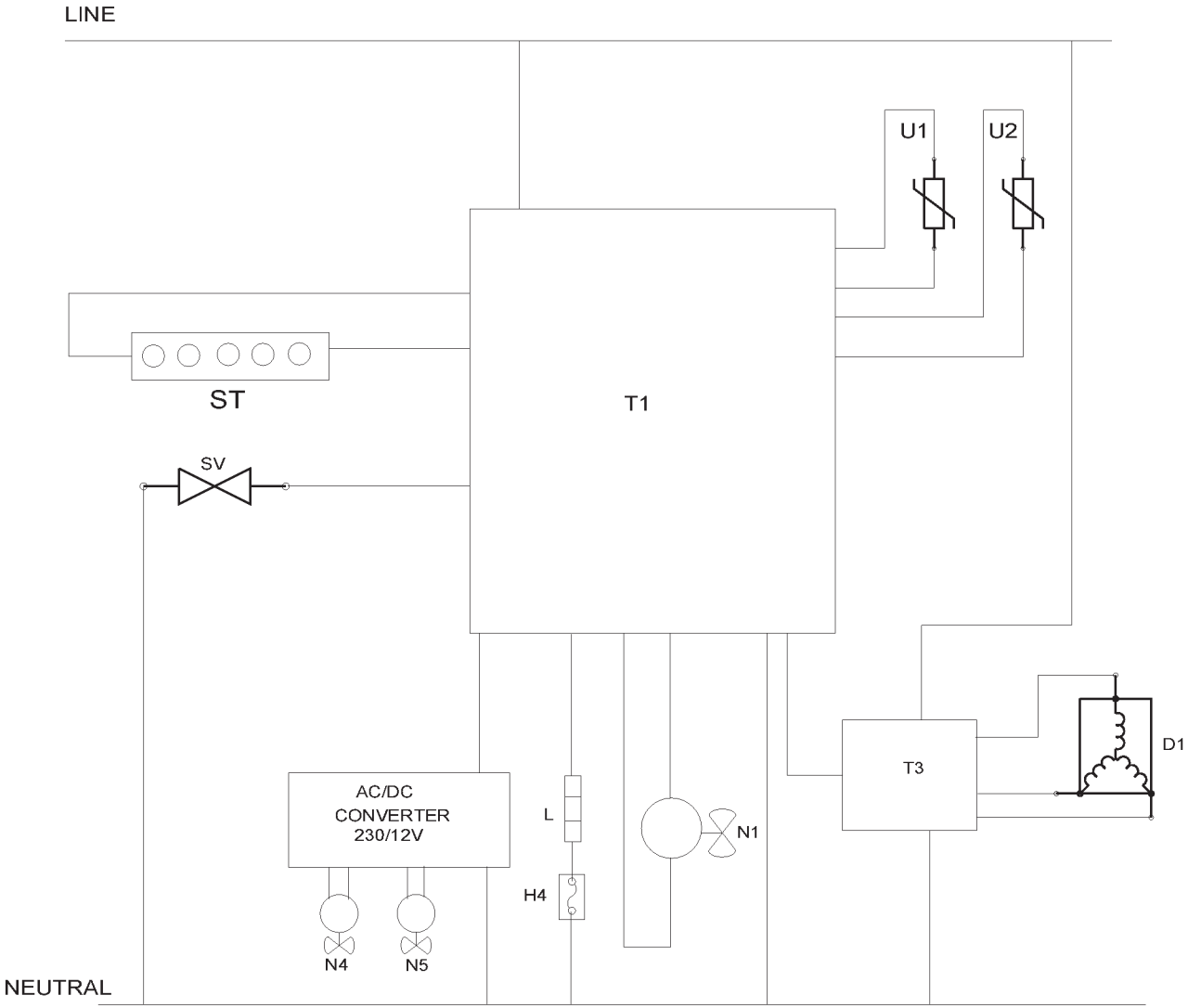

4000 108 52605-2